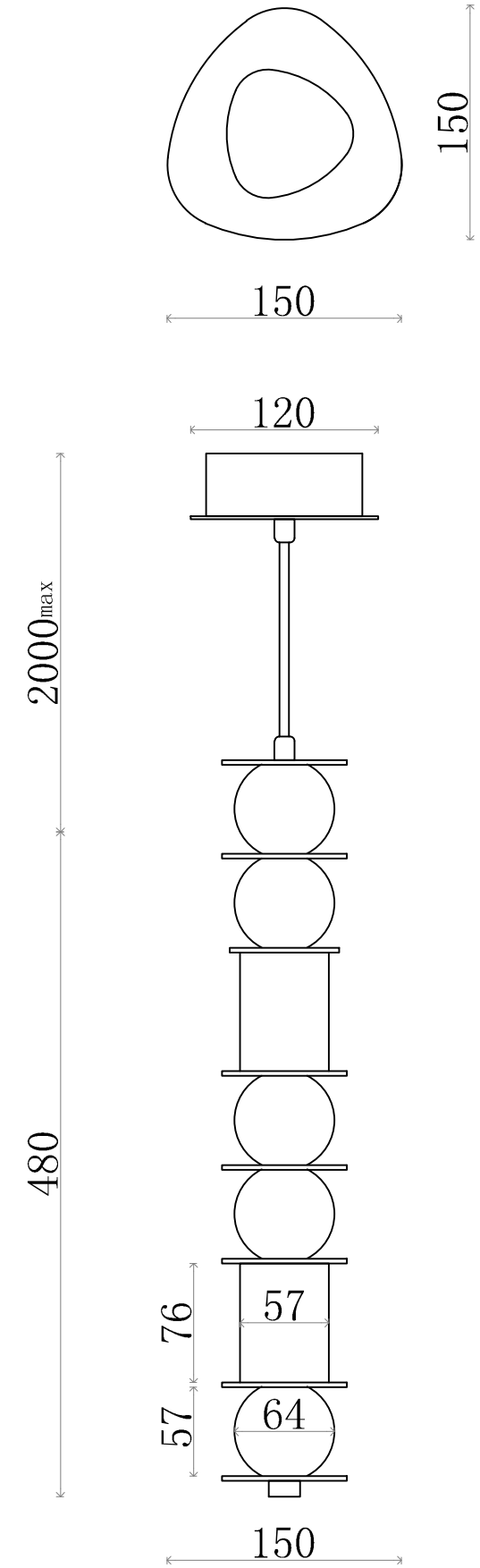

94062-5+2

150*480|150|2000max

LED 9W LED

800Lm 3000K

CRI≧80 Bulk incl